Subject: Place to get good hardware pieces
Posted by Omar007 on Sun, 27 Dec 2009 20:40:13 GMT
View Forum Message <> Reply to Message

Well i've been looking into some old PC stuff and found an old 3D shutter glass. ASUS VR100 did i come up with after googling.
I have never used it and i bought it over 6 years ago for €5,-

Now i want it to hook up with my DVI screen so i can get the VSync to control the glasses:

As you see i need a few parts

What is the best place to get them???
With shipping to Netherlands if it's an online shop
I don't want to buy it with 10 or 20 at once. I only need 1 (well maybe 2 just in case)

EDIT: DVI Dongle (pass-through) doesnt has to be ingnored. The PSU can
EDIT2: DVI-I not A or D so i have a full pass-through

File Attachments
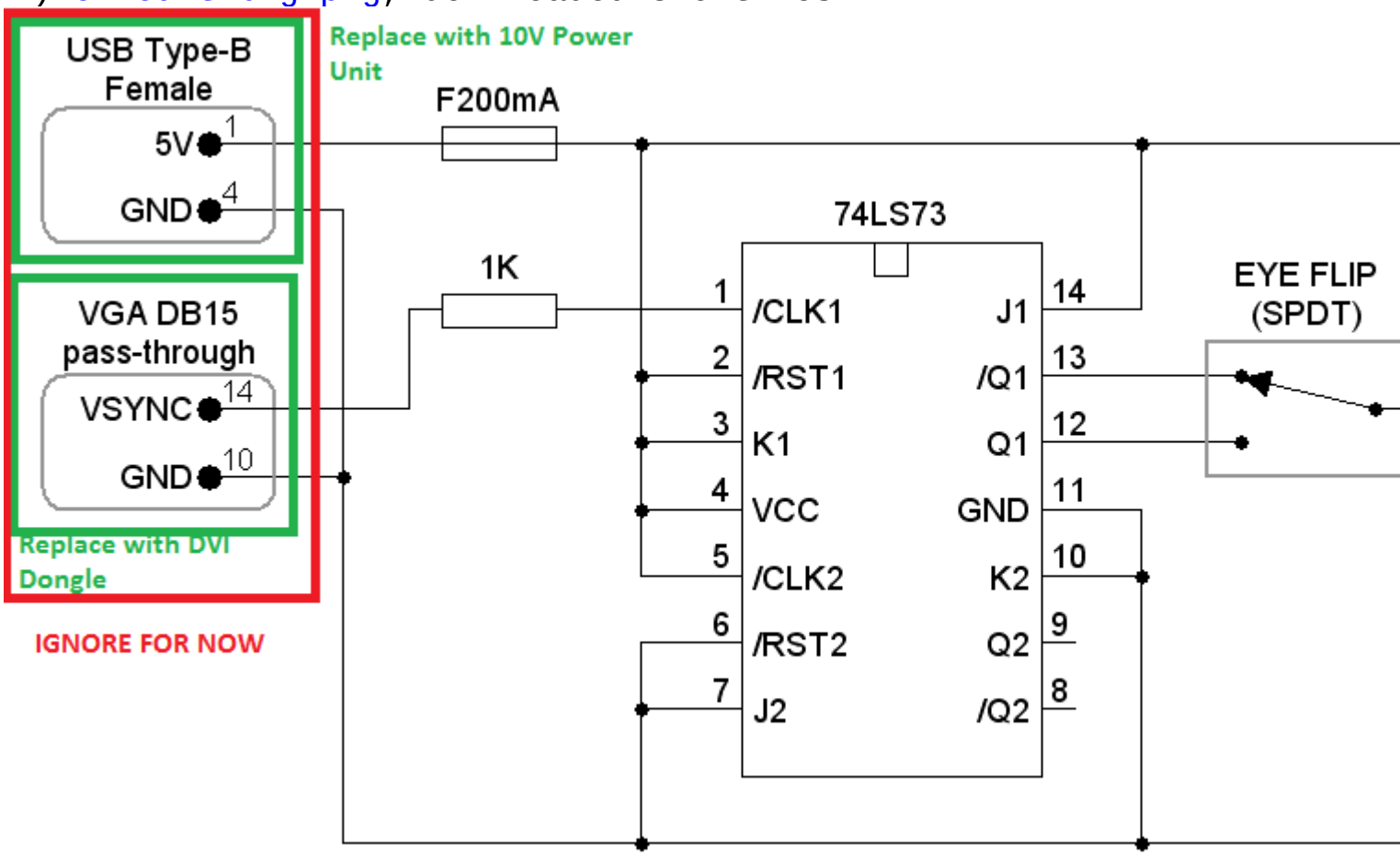
1) circuit-big.png, downloaded 320 times